Mentor Consulting: DFT Services

D A T A S H E E T

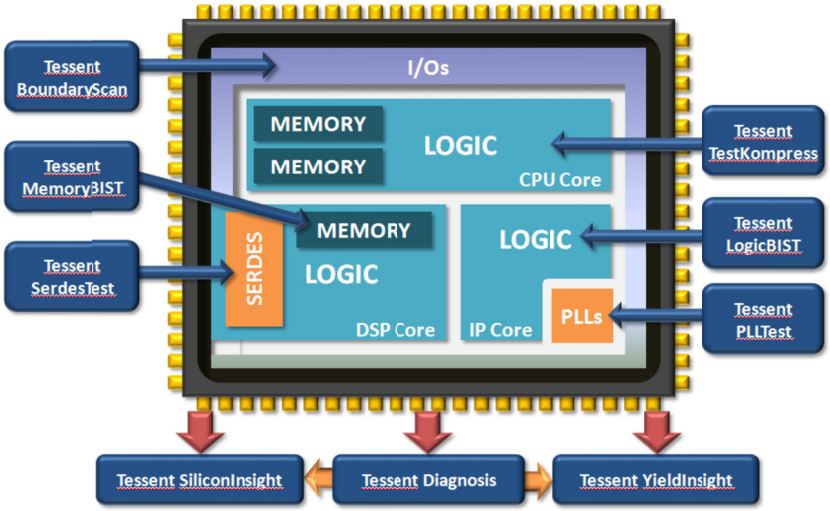

The Tessent product suite provides comprehensive silicon test and yield analysis solutions that address the challenges of manufacturing test, debug, and yield ramp for today's SoCs. Build on the foundation of this powerful test flow with experienced Mentor consultants.

Major Service Offerings

- Assessment of customer's existing DFT methodology and flow
- Foundational skill building on the Tessent Mentor BIST flow
- Modeling workshop, detailing the constructs of the memory models needed to create good MBIST structures
- Integration of the Tessent Memory BIST flow into a customer's existing DFT flow
- Execution of a pilot project solidifying the knowledge, skills and practices for future projects.

Key Customer Benefits

- Increased probability of first pass success
- Optimal integration into existing flow
- Gained knowledge of technologies and methodologies
- Integration with existing DFT methodologies and flow

Helping You Adopt Market-leading Silicon Test Solutions

The quality of integrated circuit test has always directly impacted a product's success in the marketplace. With every reduction in silicon geometries, preventing defective parts from shipping, or being sent to the next level of configuration, becomes a greater challenge. Just to maintain existing standards may require on-going process modifications. New requirements for advanced fault models such as path delay, deterministic bridging and timing-aware each demand time in a learning curve and defining methodologies to insert the new tests into existing systems.

Transitions, even necessary ones, introduce risk. Making choices in process and tools may result in unexpected costs, resource requirements or slipped schedules. These costs can have an impact during the transitions, but also during each IC project.

These changes are, by their nature, a one-time event. The best way to avoid making bad choices, or consuming valuable resources and time defining new ones, is to introduce someone into the process who has done it before. Someone with experience with the processes, as well as a deep understanding of the technologies associated with advanced IC test.

Mentor Consulting has a worldwide organization of highly experienced, solution-driven consultants who can make a dramatic difference in a team's ability to manage the DFT process. Working side by side with customers on all aspects of DFT, the consultants offer customized solutions and structured processes that move transitions forward with much more speed and quality, and with less cost, effort and risk.

With direct links to the Mentor graphics DFT product design team, the consultants have a rich background on latest technologies, along with design

knowledge only gained by working on the industry's largest and most complex projects.

Mentor consultants have the experience to contribute at any level of the DFT part of your project, from full project management to assisting your design engineers with specific key takes. The DFT Services consultants approach each project with the commitment to deliver the most effective application of DFT technology appropriate to the design.

Silicon Diagnosis for Volume

Using these latest tools and methodologies, DFT Services consultants can assist with debug and diagnosis of your test program and initial silicon.

If you have high volumes and high yield requirement, our consultants can assist with the setup and use of our Yield diagnosis tools to help you achieve this, without the cost of physical FA equipment.

Working with New Fault Models

Increase the overall test quality of your design using some of the industry's latest fault modeling techniques. Mentor consultants can help with everything from transition faults bridging and even cell aware technology.

Memory BIST Foundations

When selecting the new Tessent MemoryBIST for the first time or transitioning from Mentor Graphics MBISTArchitect, Mentor consulting will make you more productive with these new tools as quickly as possible. The Foundation package can cover all aspects of getting up to speed with the tools, modules on the flow, modeling, integration and work on a live project can be included.

Logic BIST First Steps

Becoming familiar with Logic BIST can be a daunting proposition. We can show you what makes a successful Logic BIST implementation, helping you understand the full Tessent flow, the details of the technology and library requirements.

Analogue BIST Introduction

Analogue BIST is a new and exciting technology which can help formalize the testing of your analogue mixed signal designs. Mentor Consulting will show you the steps to your first clean analogue BIST implementation, seeing the benefits from your first pilot project.

Mentor Consulting DFT Services has helped many companies meet their design goals by providing experienced consultants and proven solutions. The goal of Mentor Consulting is the same as the customer's: bringing designs in on-time and on-spec in ways that are faster, better and at less cost.

Short Term and Long Term Deployment Services

Mentor Consulting can quickly deploy and integrate new technologies, and continue to provide DFT services through long-term engagements. Our consultants, experts in advanced methodologies and Mentor Graphics tools, become vital to the continual improvement process, helping engineers to more quickly transition to new technologies that meet the demands of ever more complex designs.

Knowledge Transfer

Every customized solution and structured process includes a commitment to passing our knowledge of technologies and methodologies to the customer. In this way, engineering teams receive the skills and information needed to plan and manage future projects, and the continuation of best practices..

About Mentor Consulting

Mentor Consulting provides customers with excellence and expertise in electronic design automation infrastructure and methodology. It is the only service partner in the industry that invests in the transfer of knowledge to its customers to ensure a smooth deployment and integration of new tools and methods. Mentor Consulting solutions are engaged worldwide by forward-looking electronics companies to optimize design productivity and advance adoption of the latest industry design best practices.

For more information, contact mentor_consulting@mentor.com or visit www.mentor.com/consulting.

Copyright © 2012 Mentor Graphics Corporation
Mentor Graphics and Expedition are trademarks of Mentor Graphics Corporation.
All other trademarks are the property of their respective owners.

Corporate Headquarters
Mentor Graphics Corporation
8005 SW Boeckman Road
Wilsonville, OR 97070-7777
Phone: 503-685-7000

Sales and Product Information
Phone: 800-547-3000
503-685-8000

Silicon Valley
Mentor Graphics Corporation
46871 Bayside Parkway, #B
Fremont, CA 94538 USA
Phone: 510-354-7400
Fax: 510-354-7467

North American Support Center
Phone: 800-547-4303

Europe
Mentor Graphics Corporation
Arnulfstrasse 201
80634 Munich Germany
Phone: +49.89.57096.0
Fax: +49.89.57096.400

Pacific Rim
Mentor Graphics (Taiwan)
Room 1603, 16F
International Trade Building
No. 333, Section 1, Keelung Road
Taipei, Taiwan, ROC
Phone: 886-2-87252000
Fax: 886-2-27576027

Japan
Mentor Graphics Japan Co., Ltd.
Gotenyama Garden
7-35, Kita-Shinagawa 4-chome
Shinagawa-Ku, Tokyo 140
Japan
Phone: 81-3-5488-3030
Fax: 81-3-5488-3021

2012.06.19