Hardware-Based
Functional Verification

iSolve USB 3.0 Host Controller

D A T A S H E E T

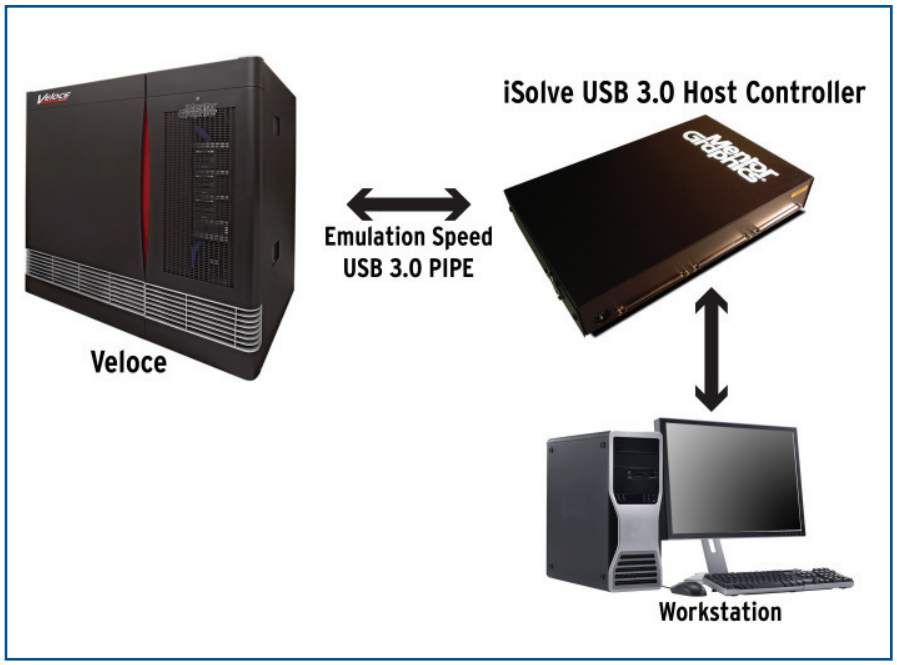

The iSolve USB 3.0 Host Controller is a real xHCI controller, providing an emulation speed USB 3.0 interface to a peripheral interface in Veloce.

The iSolve™ USB 3.0 Host Controller provides a high-speed solution for the verification of System-on-Chip (SoC) designs containing USB Super-Speed peripheral device ports. Used with the Veloce® hardware emulator, the iSolve USB 3.0 Host Controller increases the overall productivity of system-level verification by providing an industry-standard Extensible Host Controller Interface (xHCI) that connects to a Win7 PC running a user's software application. This software can then access the design under test (DUT) containing the USB 3.0 peripheral port in the Veloce emulator.

The Veloce emulation environment combined with the iSolve USB 3.0 Host Controller runs several orders of magnitude faster than software simulation. This meets the requirements of system-level engineers running concurrent hardware and software for the verification of a USB 3.0 peripheral device, where users are developing their device drivers and software applications on a PC running a Windows or Linux operating system.

FEATURES AND BENEFITS

- Develop and test software applications communicating through a USB 3.0 xHCI controller to a peripheral device port of a design inside a Veloce emulator
- SuperSpeed USB peripheral devices supported
- USB 3.0 PIPE standard interface to the design
- Standard USB transfer types supported: Control, Interrupt, and Bulk
- Unique iSolve Visibility Port interface to capture and analyze streamed USB transfer data from within the Host Controller

PRODUCT SPECIFICATIONS

- OS Support (Host PC): Linux and Win7
- OS Support (Visibility Port): Red Hat Enterprise 4, SuSE SLES 10.1
- Platforms: Veloce family of emulators
- Performance: Up to 1.5 MHz in emulation

Mentor Graphics®

The xHCI controller IP provided within the iSolve USB 3.0 Host Controller communicates with the Windows or Linux PC over a PCI Express interface, which plugs into a standard PCI Express backplane slot on the PC to deliver a high-speed communication channel. The communication with the DUT running in Veloce is provided over a standard USB 3.0 PIPE interface.

The iSolve USB 3.0 Host Controller provides simple connections to the hardware emulator and host workstation for plug-and-play usage. Emulation debug is provided through the iSolve USB 3.0 Host Controller Visibility Port, which provides a streamed data connection to the USB transfer data being exchanged between the Host and the DUT. This streamed connection can be made directly to the Veloce emulation host.

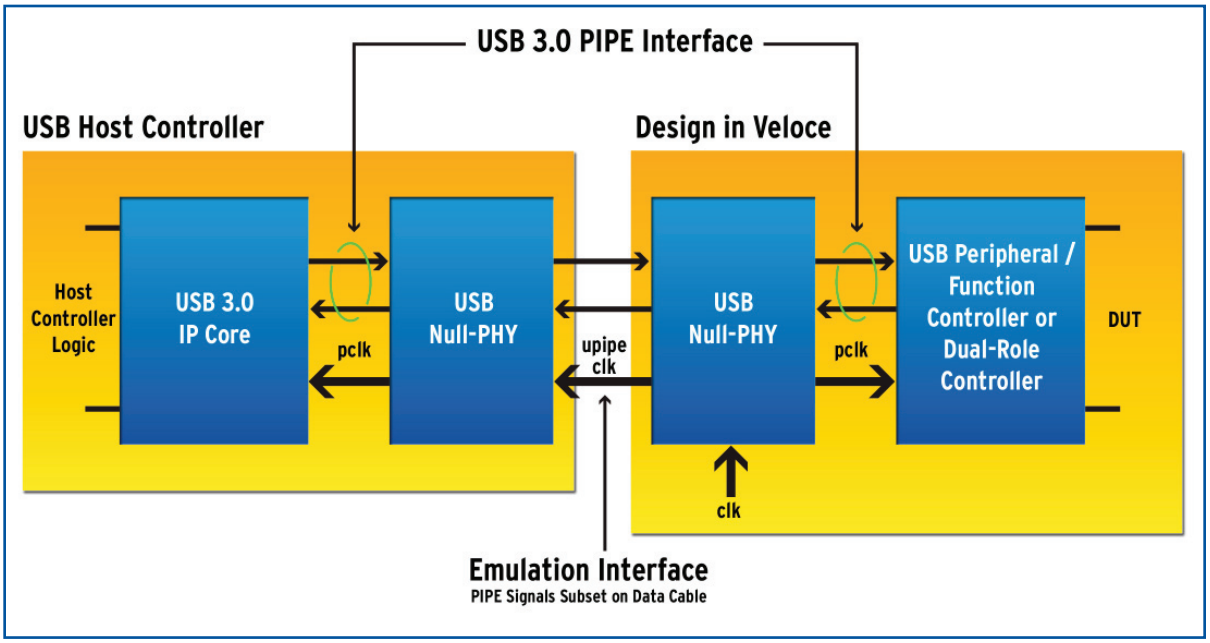

The iSolve USB 3.0 Host Controller connects to the DUT with a standard PIPE interface.

Visit our website at www.mentor.com/emulation for more information.

©2011 Mentor Graphics Corporation, all rights reserved. Mentor products and processes are registered trademarks of Mentor Graphics Corporation. All other trademarks mentioned in this document are the trademarks of their respective owners.

Corporate Headquarters
Mentor Graphics Corporation
8005 SW Boeckman Road
Wilsonville, OR 97070-7777
Phone: 503.685.7000
Fax: 503.685.1204

Sales and Product Information
Phone: 800.547.3000
sales_info@mentor.com

Silicon Valley
Mentor Graphics Corporation
46871 Bayside Parkway
Fremont, CA 94538 USA
Phone: 510.354.7400
Fax: 510.354.7467

North American Support Center
Phone: 800.547.4303

Europe
Mentor Graphics Deutschland GmbH
Arnulfstrasse 201
80634 Munich
Germany
Phone: +49.89.57096.0
Fax: +49.89.57096.400

Pacific Rim
Mentor Graphics (Taiwan)
Room 1001, 10F
International Trade Building
No. 333, Section 1, Keelung Road
Taipei, Taiwan, ROC
Phone: 886.2.87252000
Fax: 886.2.27576027

Japan
Mentor Graphics Japan Co., Ltd.
Gotenyama Garden
7-35, Kita-Shinagawa 4-chome
Shinagawa-Ku, Tokyo 140-0001
Japan
Phone: +81.3.5488.3033
Fax: +81.3.5488.3004

MGC 11-11 1030000-w