Parallel ATA IP

Host Controller with Integrated DMA

BK-3710

D A T A S H E E T

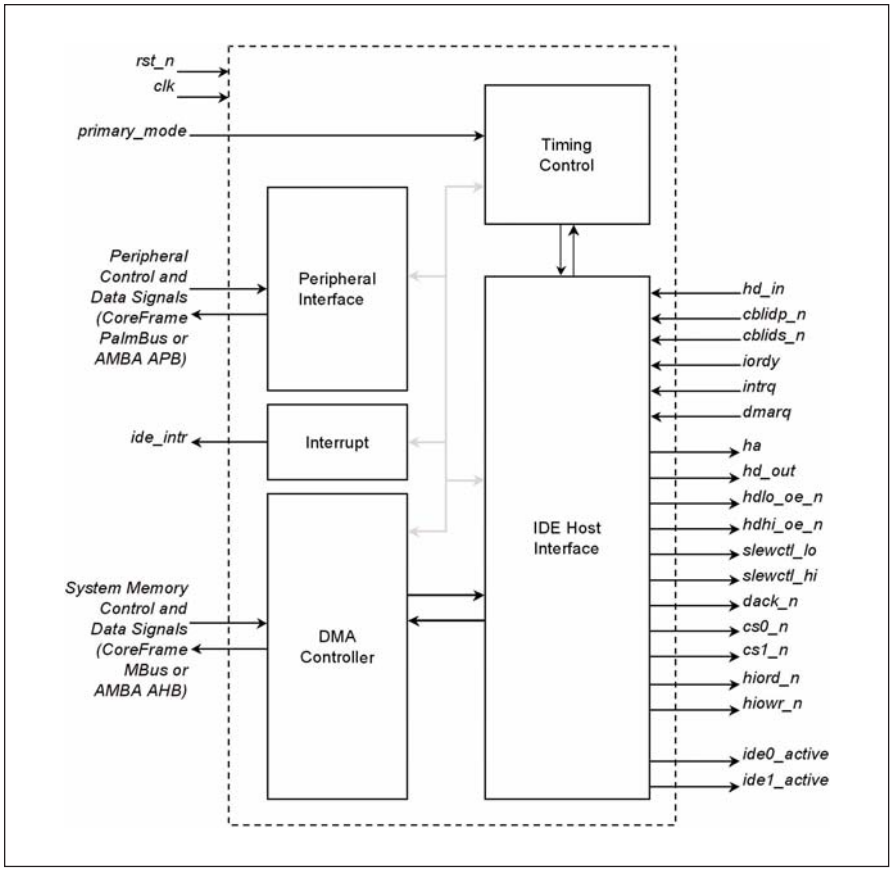

The Mentor Graphics parallel host controller with integrated direct memory access (DMA).

Major product features:

- Programmable I/O modes: 0, 1, 2, 3, and 4
- Easily configured as primary and secondary IDE controller
- Multi-word DMA modes: 0, 1, and 2
- Synchronous Ultra ATA-33, -66, -100, and -133 modes: 0, 1, 2, 3, 4, 5, and 6
- Descriptor-based, scatter-gather DMA engine
- Intel register set compatible
- Support for synchronous or asynchronous DMA interface for data transfers
- Supports up to two devices with independent master/slave timing controls
- Supports either CoreFrame or ARM AMBA AHB bus interface

Parallel ATA Host Controller with Integrated DMA

The Mentor Graphics® parallel ATA host interface controller provides an efficient and easy-to-use interface to IDE and ATAPI devices. The core implements programmable I/O, multi-word direct memory access (DMA), and Ultra ATA-33, -66, -100, and -133 modes of operation and supports up to two devices.

The core interface to the system-on-chip provides PIO access and DMA capability to optimize data transfers to and from the IDE devices. For ease of integration, the core includes a register set compatible with the Intel chip set, including a descriptor-based, scatter-gather DMA core. This core is compatible with ATA-4, and with Ultra ATA-33, -66, -100, and -133 extensions. However, single-word DMA is not supported.

The parallel ATA host controller is designed to interface to the host processor and system memory using either the CoreFrame® or the ARM AMBA AHB bus interface. It can be configured to support either an asynchronous or synchronous system interface.

Parallel ATA Host Controller Applications

The parallel ATA host controller is used to control IDE disk drives. It is applicable to any system utilizing IDE/ATA and ATAPI drives for data storage including notebook and desktop computers, servers, set-top boxes, and test equipment. The parallel ATA host controller is suitable for use with all form factor IDE/ATA and ATAPI drives.

The example below shows the IDE host block used in a PCI I/O chip for use in a personal computer. The application supports four drives by instantiating two IDE host controller blocks; one controller is configured as a primary port controller; the second controller is configured as a secondary port controller. The core includes a scatter-gather DMA channel compatible with the Intel scatter-gather DMA engine.

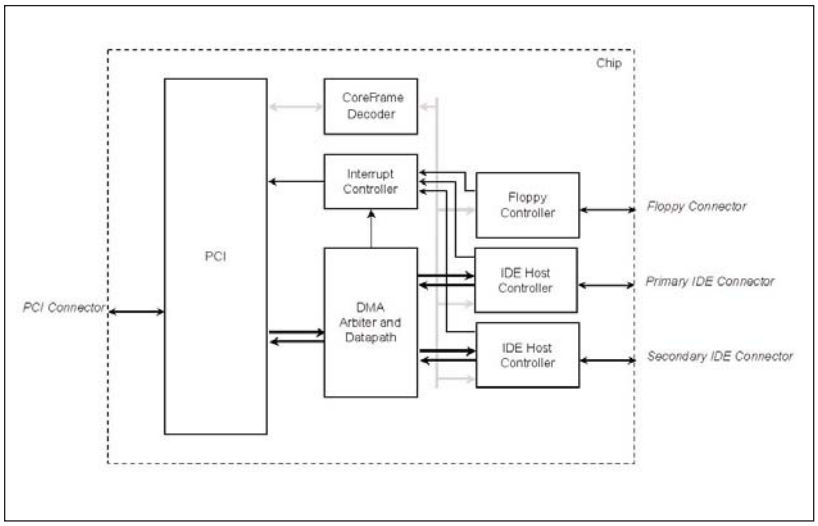

Disk drive controller for the PC.

CoreFrame Architecture

The CoreFrame architecture provides a high-performance interconnect scheme that allows silicon functional blocks to be combined quickly and easily. The architecture is independent of foundry, processor, and I/O. It supports 8-, 16-, and 32-bit peripherals.

Mentor Product and Technology Interoperability

Mentor's successful involvement in a variety of EDA technologies allows our IP customers to take full advantage of other Mentor technologies when the need arises. Integrating related Mentor technologies, such as embedded software, 0-In® checkers and monitors, and hardware emulation, offers IP customers a more seamless and cost-effective path to product success and enables customers to efficiently address the ever-changing dynamics of the industry.

World-Class Support from Mentor

Mentor Graphics is the only EDA company to receive the exclusive STAR (Software Technical Assistance Recognition) Life-Time Achievement Award — *five times*. This award-winning customer support division works closely with customers throughout the world and is dedicated to the entire design cycle.

IP Standards Compliance

Mentor Graphics actively supports key industry standards and protocols for successful IP integration. Mentor has significant involvement in the following standards bodies: IEEE-Ethernet 802.3; USB-IF; ASI SIG; SATA International Organization, and the VSIA Alliance.

Visit www.mentor.com/ip for additional IP product news and information

© 2006 Mentor Graphics Corporation. All Rights Reserved.
0-In and Mentor Graphics are registered trademarks of Mentor Graphics Corporation. CoreFrame is a registered trademark of Palmchip Corporation.
All other trademarks mentioned in this document are trademarks of their respective owners.

Corporate Headquarters
Mentor Graphics Corporation
8005 S.W. Boeckman Road
Wilsonville, Oregon 97070 USA
Phone: 503-685-7000
North American Support Center
Phone: 800-547-4303
Fax: 800-684-1795

Silicon Valley
Mentor Graphics Corporation
1001 Ridder Park Drive
San Jose, California 95131 USA
Phone: 408-436-1500
Fax: 408-436-1501

Europe
Mentor Graphics
Deutschland GmbH
Arnulfstrasse 201
80634 Munich
Germany
Phone: +49.89.57096.0
Fax: +49.89.57096.400

Pacific Rim
Mentor Graphics Taiwan
Room 1603, 16F,
International Trade Building
No. 333, Section 1, Keelung Road
Taipei, Taiwan, ROC
Phone: 886-2-27576020
Fax: 886-2-27576027

Japan
Mentor Graphics Japan Co., Ltd.
Gotenyama Hills
7-35, Kita-Shinagawa 4-chome
Shinagawa-Ku, Tokyo 140
Japan
Phone: 81-3-5488-3030
Fax: 81-3-5488-3031

MGC 08/06 1025190-w