PE-RMII

RMII I/F for Inventra's 10/100 Ethernet MACs

Inventra™ Soft Core (RTL IP)

D A T A S H E E T

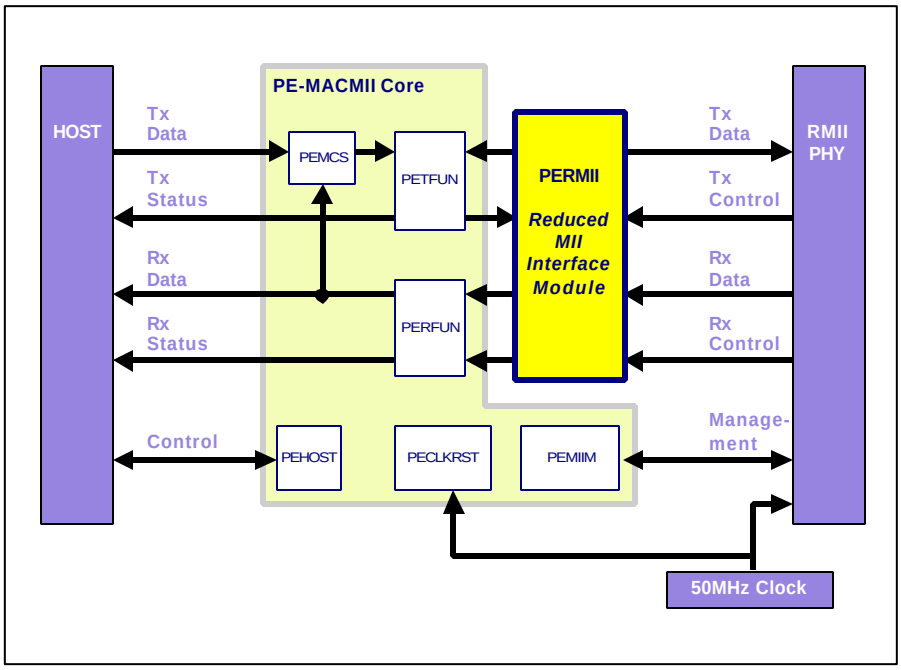

PE-RMII Application

Overview

The PE-RMII pack provides a Reduced MII Interface allows a 10/100 Mbps Ethernet MAC to be used with low pin-count PHYs (6 pin rather than 16 pin). Suitable 10/100 Ethernet MAC cores are available within the Mentor Graphics Inventra™ range of soft cores.

The required 6-signal + clock interface to the PHY is provided by the PERMII module within the PE-RMII pack. This module also performs the conversion of the 4-bit MII data handled by the basic MAC design to/from the 2-bit data format of the RMII interface in both the transmit and the receive directions. The registers within the PHY are read and written through the MAC's Host Interface.

The combination of the Ethernet MAC with the PE-RMII interface is intended for incorporation in a customer's own ASIC design. Both 10 Mbps and 100 Mbps operational speeds are supported.

There are many different possible applications, including Network Interface designs, Ethernet Switching designs and test equipment designs.

The PERMII module was designed in Verilog and may be synthesized in .5µm CMOS (or better). The module synthesizes to approximately 1,600 gates.

Major Product Features:

- Works with Inventra's 10/100Mbps Ethernet MACs
- Provides interface to low pin-count PHYs
- Adheres to RMII Specification v1.2
- Optimized for switching, multiport and embedded applications
- Fully synthesizable
- Scan insertion-friendly design

Deliverables:

- Verilog source of PERMII module
- Wrapper integrating PERMII module with Inventra's MAC modules
- Synthesis constraints files
- Functional testbench with documentation of conformance to appropriate IEEE PICS
- Design documentation

Related Products:

- PE-MACMII™ 10/100 Ethernet MAC
- PE-MCXMAC 10/100/1000 Ethernet MAC
- PE-SMII SMII interface
- PE-PMD TP-PMD (100X) interface for PE-MACMII
- PE-ENDEC 10T interface for PE-MACMII
- PE-MSTAT™ Statistics Package
- PE-SAL™ Station Address Logic Module

Mentor Graphics is the leading supplier of a broad range of IP soft cores targeting standards-based communications applications. These highly re-usable cores help systems and chip designers get to market faster.

Functional Overview

The PE-RMII pack provides a Reduced Media Independent Interface for Inventra's 10/100 Mbps Ethernet MAC soft cores.

The interface between the 16-signal MII interface and the 6-signal RMII interface is provided by the PERMII module supplied within the PE-RMII pack.

In the transmit direction, the MAC module generates MII nibble data streams, in response to frame byte streams supplied by the host system. The PERMII module takes this nibble data which is clocked at 25 MHz (or 2.5 MHz in 10 Mbps mode) and outputs 2-bit wide data at the RMII Reference Clock frequency of 50 MHz. In 10 Mbps operation, 2-bit data is output for a period of ten clocks of the RMII reference clock, thus modulating the bandwidth to 10 Mbps.

In the receive direction, the RMII PHY provides 2-bit data synchronous to the RMII reference clock. The PERMII module first detects the Start-of-Frame Delimiter (SFD) in order to ensure the proper nibble boundary, and then outputs the SFD followed by the frame via the MII to the MAC. In 10 Mbps operation, the RMII PHY outputs new 2-bit data every ten clocks. The PERMII module samples the data every ten clocks and shifts it into an 8-bit shift register which is used for the SFD detection.

Error Indication

In addition to normal packet processing, the PERMII module will detect the false carrier condition as signaled by the RMII PHY. The PERMII module also provides the RX_ER input. This is a mandatory output for PHYs but is an optional input on MACs.

Handling delayed data

Where the RMII PHY used includes an elasticity FIFO, receive data can be somewhat delayed relative to the actual receive carrier event. In order to delineate the actual carrier and still provide data across the RMII, the PERMII module toggles the Carrier Sense / Data Valid (CRS_DV) signal at the end of the frame for each 'elastic nibble' transferred.

Using the PE-RMII pack

The PE-RMII pack is solely for use with Inventra's Ethernet MAC cores and so will typically be purchased alongside the MAC core.

Purchasing the PE-RMII pack not only gives you the PERMII module but also a top-level wrapper in which the PERMII module is instantiated alongside the modules of the Ethernet MAC core.

Implementation

The combined system of the MAC core with the PE-RMII interface exports the transmit and receive packet streams directly to the top of the design, thereby allowing customer-specific DMA solutions to be readily connected to the core. This in turn allows the MAC's performance to be tailored to and optimized for each individual application.

The Host interface needs to be tailored to the individual application. Where the MAC is used in a multi-port device like a switch, the Host CPU interface will typically be to an embedded processor. In an end-station implementation, the interface might be to the end-station bus.

© 2002-2004 Mentor Graphics Corporation, All Rights Reserved.
™Mentor Graphics and Inventra are trademarks of Mentor Graphics Corporation.
All other trademarks are the property of their respective owners.

Corporate Headquarters
Mentor Graphics Corporation
8005 S.W. Boeckman Road
Wilsonville, OR 97070 USA
Phone: 503-685-7000
North American Support Center
Phone: 800-547-4303
Fax: 800-684-1795

Silicon Valley Headquarters
Mentor Graphics Corporation
1001 Ridder Park Drive
San Jose, California 95131 USA
Phone: 408-486-1500
Fax: 408-436-1501

European Headquarters
Mentor Graphics Corporation
Immeuble le Pasteur
13/15, rue Jeanne Braconnier
92360 Meudon La Foret
France
Phone: 33-1-40-94-74-74
Fax: 33-1-46-01-91-73

Pacific Rim Headquarters
Mentor Graphics (Taiwan)
Room 1603, 16F,
International Trade Building
No.333, Section 1, Keelung Road
Taipei, Taiwan, ROC
Phone: 886-2-27576020
Fax: 886-2-2756027

Japan Headquarters
Mentor Graphics Japan Co., Ltd.
Gotenyama Hills
7-35, Kita-Shinagawa 4-chome
Shinagawa-Ku, Tokyo 140
Japan
Phone: 81-3-5488-3030
Fax: 81-3-5488-3031

01/04 PD-59014.002-FO