PE-ENDEC

ENDEC I/F for PE-MACMII™ Ethernet MAC

Inventra™ Soft Core (RTL IP)

D A T A S H E E T

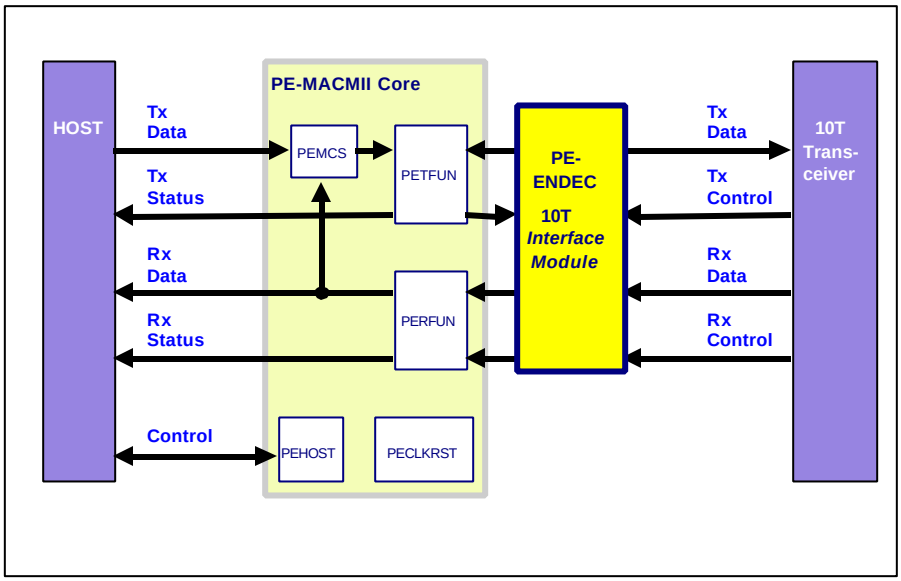

PE-ENDEC Application

Overview

The PE-ENDEC pack provides an interface for the PE-MACMII Ethernet MAC to the 7-wire connection of 10Base-T transceivers. The PE-MACMII is also available in the Mentor Graphics Inventra™ range of soft cores.

The required the serial bit-stream interface to the transceiver is provided by the PE-ENDEC module within the PE-ENDEC pack.

The combination of the PE-MACMII with the PE-ENDEC interface is intended for incorporation in a customer's own ASIC design.

There are many different possible applications, including Network Interface designs, Ethernet Switching designs and test equipment designs.

The PE-ENDEC module and the PE-MACMII core were designed in Verilog and may be synthesized in .5µm CMOS (or better). The combined system synthesizes to approximately 11,000 gates.

Major Product Features:

- Works with PE-MACMII 10/100Mbps Ethernet MAC
- Provides interface to 10Base-T transceivers
- Optimized for switching, multiport and embedded applications
- Loss of Carrier, Error Detect and Signal Quality Error (SQE) monitoring
- Jabber protection
- Fully synthesizable
- Scan insertion-friendly design

Deliverables:

- Verilog source of PE-ENDEC module
- Wrapper integrating PE-ENDEC module with PE-MACMII module
- Synthesis constraints files
- Functional testbench with documentation of conformance to appropriate IEEE PICS
- Design documentation

Related Products:

- PE-MACMII™ 10/100 Ethernet MAC
- PE-RMII RMII interface for PE-MACMII
- PE-SMII SMII interface for PE-MACMII
- PE-PMD TP-PMD interface for PE-MACMII
- PE-MSTAT™ Statistics Package
- PE-SAL™ Station Address Logic Module

Mentor Graphics is the leading supplier of a broad range of IP soft cores targeting standards-based communications applications. These highly re-usable cores help systems and chip designers get to market faster.

PE-ENDEC: ENDEC I/F for PE-MACMII Ethernet MAC Soft Core

Functional Overview

The PE-ENDEC pack provides a 10Base-T Interface for the PE-MACMII 10/100 Mbps Ethernet MAC soft core. (The PE-MACMII offers a standard MII interface.) This allows the MAC to be linked 10Base-T transceivers.

The interface between the 16-signal MII interface and the 7-wire 10Base-T transceivers is provided by the PE-ENDEC module included in the PE-ENDEC pack.

On the transmit side of the operation, this module converts transmit MII nibble data sent from the MAC's transmit function into the serial transmit data stream used by a 10Base-T transceiver. The MII nibble data is sent to the PE-ENDEC at 2.5 MHz and the outgoing serial bit stream leaves the PE-ENDEC at 10 MHz.

To create the 2.5 MHz clock that is sent to the MAC's transmit function, the PE-ENDEC holds a Transmit Clock Enable signal High for one 10 MHz cycle, then Low during the next three cycles in order to create a pulse every 2.5 MHz cycle. The transmit function then uses this signal in order to send a nibble every 2.5 MHz cycle.

On the receive side, the PE-ENDEC creates a Receive Clock Enable in the same way that it creates a Transmit Clock Enable i.e. by holding the Receive Clock Enable signal High for one 10 MHz cycle, then Low during the next three cycles. The MAC's receive function then uses this signal to receive a nibble every 2.5 MHz cycle.

The serial Receive Data stream and accompanying Carrier Sense signal from the 10Base-T ENDEC are converted by the PE-ENDEC into a parallel MII Nibble Transmit Data stream, plus an accompanying MII Receive Data Valid for the MII multiplexer. The ENDEC Carrier Sense signal is examined along with the serial receive data in order to align the nibble output stream with the serial input stream. When the Carrier Sense signal is asserted, the PE-ENDEC looks for the Start-of-Frame Delimiter and only then asserts its Receive Data Valid. The PE-ENDEC module also monitors receive dribble bits and converts from one to seven dribble bits into a single dribble nibble.

The PE-ENDEC generates Carrier Sense and Collision for the MII multiplexer. It also monitors the ENDEC collision line for the SQE error condition and the Carrier Sense signal for Loss-of-Carrier events. If Jabber is detected, transmission is blocked.

Using the PE-ENDEC pack

The PE-ENDEC pack is solely for use with the PE-MACMII Ethernet MAC core and so will typically be purchased alongside the PE-MACMII core.

Purchasing the PE-ENDEC pack not only gives you the PE-ENDEC module but also a top-level wrapper in which the PE-ENDEC module is instantiated alongside the modules of the PE-MACMII core. The way in which this combined system operates is described in a Design Document, supplied in the PE-ENDEC pack.

Implementation

The combined system of the PE-MACMII with the PE-ENDEC interface exports the transmit and receive packet streams directly to the top of the design, thereby allowing customer-specific DMA solutions to be readily connected to the core. This in turn allows the MAC's performance to be tailored to and optimized for each individual application.

The Host interface needs to be tailored to the individual application. Where the MAC is used to create a multi-port device like a switch, the Host CPU interface will typically be to an embedded processor. In an end-station implementation, the interface might be to the end-station bus.

© 2002-2004 Mentor Graphics Corporation, All Rights Reserved.
™Mentor Graphics and Inventra are trademarks of Mentor Graphics Corporation.
All other trademarks are the property of their respective owners.

Corporate Headquarters
Mentor Graphics Corporation
8005 S.W. Boeckman Road
Wilsonville, OR 97070 USA
Phone: 503-685-7000
North American Support Center
Phone: 800-547-4303
Fax: 800-684-1795

Silicon Valley Headquarters
Mentor Graphics Corporation
1001 Ridder Park Drive
San Jose, California 95131 USA
Phone: 408-486-1500
Fax: 408-436-1501

European Headquarters
Mentor Graphics Corporation
Immeuble le Pasteur
13/15, rue Jeanne Braconnier
92360 Meudon La Foret
France
Phone: 33-1-40-94-74-74
Fax: 33-1-46-01-91-73

Pacific Rim Headquarters
Mentor Graphics (Taiwan)
Room 1603, 16F,
International Trade Building
No.333, Section 1, Keelung Road
Taipei, Taiwan, ROC
Phone: 886-2-27576020
Fax: 886-2-2756027

Japan Headquarters
Mentor Graphics Japan Co., Ltd.
Gotenyama Hills
7-35, Kita-Shinagawa 4-chome
Shinagawa-Ku, Tokyo 140
Japan
Phone: 81-3-5488-3030
Fax: 81-3-5488-3031

01/04 PD-59010.002-FO