PE-PMD

TP-PMD I/F for PE-MACMII™ Ethernet MAC

Inventra™ Soft Core (RTL IP)

D A T A S H E E T

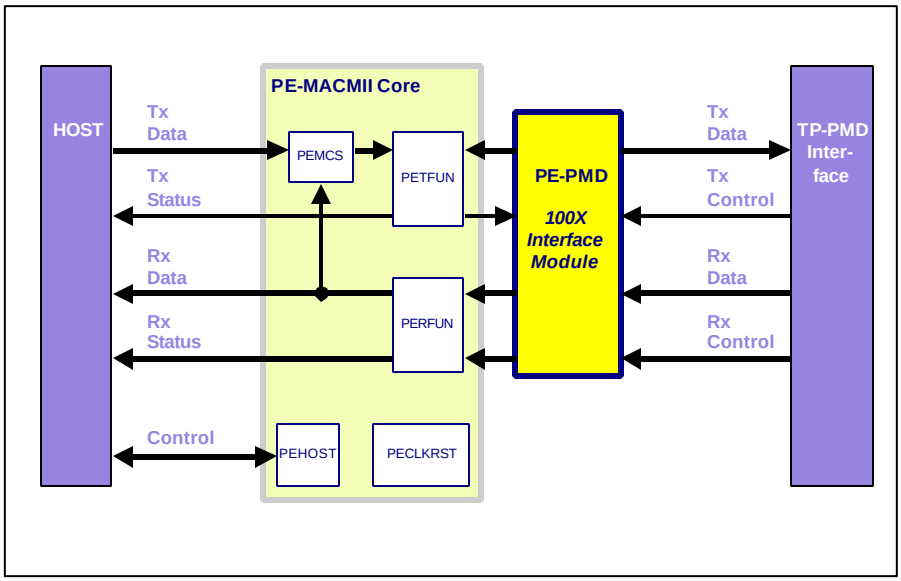

PE-PMD Application

Overview

The PE-PMD pack provides a 100Base-X TP-PMD interface for the PE-MACMII which allows this 10/100 Mbps Ethernet MAC to be used with a range of 100X transceivers. The PE-MACMII is also available in the Mentor Graphics Inventra™ range of soft cores.

The required 4B5B ciphering and deciphering is provided by the PE-PMD module within the PE-PMD pack using a built-in self-synchronizing de-scrambler. This 100Mbps PMD interface module also incorporates a 330ms link fail timer. The registers within the PHY are read and written through the PE-MACMII's Host Interface.

The combination of the PE-MACMII with the PE-PMD interface is intended for incorporation in a customer's own ASIC design.

There are many different possible applications, including Network Interface designs, Ethernet Switching designs and test equipment designs.

The PE-PMD module and the PE-MACMII core were designed in Verilog and may be synthesized in .5µm CMOS (or better). The combined system synthesizes to approximately 12,000 gates.

Major Product Features:

- Works with PE-MACMII 10/100Mbps Ethernet MAC
- Provides interface to 100Base-TX and 100Base-FX transceivers
- Optimized for switching, multiport and embedded applications
- Self-synchronizing de-scrambler
- Built-in 300ms link fail timer
- Fully synthesizable
- Scan insertion-friendly design

Deliverables:

- Verilog source of PE-PMD module
- Wrapper integrating PE-PMD module with PE-MACMII module
- Synthesis constraints files
- Functional testbench with documentation of conformance to appropriate IEEE PICS
- Design documentation

Related Products:

- PE-MACMII™ 10/100 Ethernet MAC
- PE-RMII RMII interface for PE-MACMII
- PE-SMII SMII interface for PE-MACMII
- PE-ENDEC 10T interface for PE-MACMII
- PE-MSTAT™ Statistics Package
- PE-SAL™ Station Address Logic Module

Mentor Graphics is the leading supplier of a broad range of IP soft cores targeting standards-based communications applications. These highly re-usable cores help systems and chip designers get to market faster.

Functional Overview

The PE-PMD pack provides a TP-PMD Interface for the PE-MACMII 10/100 Mbps Ethernet MAC soft core. (The PE-MACMII offers a standard MII interface.) This allows the MAC to be linked to 100X transceivers.

The required 4B5B conversion is provided by the PE-PMD module included in the PE-PMD pack.

The transmit side of the PE-PMD module is responsible for converting transmit nibble data from the internal MII transmit lines sourced from the PE-MACMII's transmit function block (PETFUN) into encoded and ciphered transmit code-groups for the external TP-PMD devices.

The Nibble Input Data, along with Transmit Enable and Transmit Error, is used to encode the 4B5B transmit code-group to be passed to the TP-PMD device. A state machine detects the rising and falling edges of Transmit Enable and uses these to gate the substitution of the Start-of-Stream Delimiter and the End-of-Stream sequences. A cipher stream is generated by a linear feedback shift register and is used to scramble the encoded transmit code-groups.

The receive side of the PE-PMD module is responsible for converting receive code-groups from the external TP-PMD devices into deciphered, aligned and decoded nibble data for the MII receive lines to the PE-MACMII's PERFUN receive function.

The Symbol Input Data is deciphered with a cipher stream from a linear feedback shift register which is kept in lock with the transmitting cipher register by means of a self synchronizing decipher, a hypothesis register and an idle counter. The deciphered code-groups are then aligned by means of a state machine which examines the input stream for idles and the SSD /J/K code-group sequence.

A decoder then translates the 4B/5B deciphered and aligned code-groups into data nibbles. The decoder will also flag invalid code-groups.

Using the PE-PMD pack

The PE-PMD pack is solely for use with the PE-MACMII Ethernet MAC core and so will typically be purchased alongside the PE-MACMII core.

Purchasing the PE-PMD pack not only gives you the PE-PMD module but also a top-level wrapper in which the PE-PMD module is instantiated alongside the modules of the PE-MACMII core.

Implementation

The combined system of the PE-MACMII with the PE-PMD interface exports the transmit and receive packet streams directly to the top of the design, thereby allowing customer-specific DMA solutions to be readily connected to the core. This in turn allows the MAC's performance to be tailored to and optimized for each individual application.

The Host interface needs to be tailored to the individual application. Where the MAC is used in a multi-port device like a switch, the Host CPU interface will typically be to an embedded processor. In an end-station implementation, the interface might be to the end-station bus.

© 2002-2004 Mentor Graphics Corporation, All Rights Reserved.
™Mentor Graphics and Inventra are trademarks of Mentor Graphics Corporation.
All other trademarks are the property of their respective owners.

Corporate Headquarters
Mentor Graphics Corporation
8005 S.W. Boeckman Road
Wilsonville, OR 97070 USA
Phone: 503-685-7000
North American Support Center
Phone: 800-547-4303
Fax: 800-684-1795

Silicon Valley Headquarters
Mentor Graphics Corporation
1001 Ridder Park Drive
San Jose, California 95131 USA
Phone: 408-486-1500
Fax: 408-436-1501

European Headquarters
Mentor Graphics Corporation
Immeuble le Pasteur
13/15, rue Jeanne Braconnier
92360 Meudon La Foret
France
Phone: 33-1-40-94-74-74
Fax: 33-1-46-01-91-73

Pacific Rim Headquarters
Mentor Graphics (Taiwan)
Room 1603, 16F,
International Trade Building
No.333, Section 1, Keelung Road
Taipei, Taiwan, ROC
Phone: 886-2-27576020
Fax: 886-2-2756027

Japan Headquarters
Mentor Graphics Japan Co., Ltd.
Gotenyama Hills
7-35, Kita-Shinagawa 4-chome
Shinagawa-Ku, Tokyo 140
Japan
Phone: 81-3-5488-3030
Fax: 81-3-5488-3031

01/04 PD-59012.002-FO