FloEFD any Hydraulic/Pneumatic Systems

MECHANICAL ANALYSIS
Engineering Fluid Dynamics

FloEFD (Engineering Fluid Dynamics) is a different breed of Computational Fluid Dynamics (CFD) software. It enables you to simulate fluid flow in hydraulic and pneumatic systems using 3D CAD models directly, with no need for data translations or copies.

FloEFD can help you to:

- Minimize pressure drop
- Determine the correct flow rate at ports to suit bearing or gear lubrication requirements
- Promote laminar flow
- Improve manifold performance
- Realize impact of using different port sizes along the same shaft
- Control and optimize mixing processes
- Gain insight into what is happening inside your products
- Prove performance prior to test and production

From CAD to Analysis Effortlessly

Unlike other CFD tools, FLoEFD was developed for engineers by engineers so it works the way you do. Combined with your preferred CAD software, FloEFD puts a powerful simulation tool on your desk.

With FloEFD you do not need to worry about oversimplifying your solid models to get them analysis-ready. Its advanced meshing technology makes analysis of real-world problems a breeze so you can get on with the business of improving your products without becoming a full-time fluid dynamics specialist.

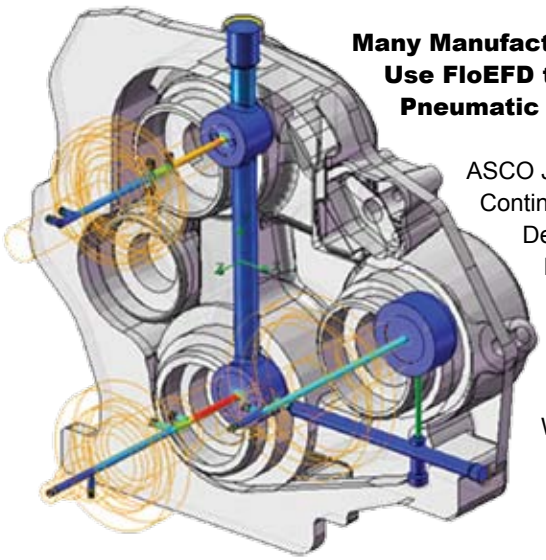

Many Manufacturers Around the World Use FloEFD to Optimize Hydraulic and Pneumatic Systems

ASCO Joucomatic
Continental Teves AG & Co.
Delphi Automotive Systems
Dana
FTE Automotive GmbH
Haldex Brake Products GmbH
RAPA Rausch & Pausch
Schaeffler (LuK)
Watts Industries

Customer Testimonial

" Testing, which used to take two weeks, now takes only one day; therefore, our design test schedule has shortened dramatically. "

R. Aarntzen, R&D/Engineering Manager
Watts Industries

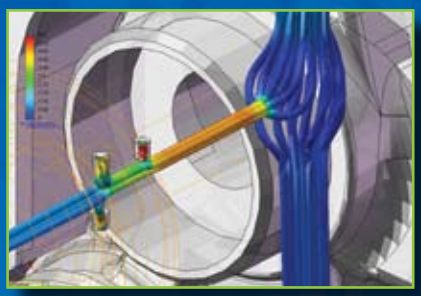

Copyright © 2008 Mentor Graphics Corp
Mentor Graphics is a registered trademark of Mentor Graphics Corporation.
All other trademarks mentioned in this document are trademarks of their respective owners

Please visit our website at:
www.mentor.com/mechanical

Mentor Graphics
Mechanical Analysis Division
81 Bridge Road, Hampton Court
Surrey, KT8 9HH, UK

Tel: +44(0)20 8487 3000
Fax: +44 (0)20 8487 3001
info-mechanical@mentor.com

Mentor Graphics
Mechanical Analysis Division
300 Nickerson Road, Suite 200
Marlborough, MA 01752, USA

Tel: +1 (508) 480 0881
Fax: +1 (508) 480 0882
info-mechanical@mentor.com

Mentor Graphics